TECHNICAL INFORMATION AND SERVICE DATA
MANUFACTURERS SUPERVISED SERVICE
Issued by Amalgamated Wireless (Australasia) Limited

AWA SOLID STATE CAR RADIOS PL & ML SERIES USING PRINTED CIRCUIT BOARD ASSEMBLIES PART Nos. 73206, 77155 and 77445.

GENERAL DESCRIPTION

PCB Assembly 73206 contains 9 transistors, 1 diode and conventional i.f. transformers. It is fitted in a range of 11 transistor press-button and manually tuned car radios.

PCB Assembly 77155 contains 6 transistors, 1 audio output IC, 1 diode and a ceramic i.f. filter.

PCB Assembly 77445 is a modification of 77155 board to cover alternative i.f. transformer types.

SPECIFICATIONS

Frequency Range	525kHz-1620kHz
Intermediate Frequency	455kHz
Battery Voltage (Nominal)	12 Volts
Battery Polarity	Negative Earth*
Output Impedance	3 Ohms at 400Hz
Undistorted Audio Output	5 Watts

Battery Consumption	No Signal	Full Output
Z & Y Series	100mA	700mA
H & G Series	60mA	700mA
Pilot Lamp		150mA

* On models PL1, PL1Z, ML4 & ML4Z provision is made for polarity change over.

AWA MODEL REFERENCE			WHERE USED	
PCB 73206	PCB 77155	PCB 77445	CAR MODEL	RADIO REFERENCE No.
PL1, PL1Z	PL1H	PL1G	Universal, Press Button	—
ML4, ML4Z	ML4H	ML4G	Universal, Manual	—
PL11, PL11Z PL11Y	PL11H	PL11G	Volkswagen (All types)	VA398
PL15, PL15Z	PL15H	PL15G	Rambler Matador	R301 21 35
PL21*	PL21H*	PL21G*	Universal, Press Button	—
PL26	PL26H	PL26G	Leyland Marina	HYL4423
PL30*			Volvo 144	—
PL49Z	PL49H	PL49G	Leyland P76	HYL4662, AYD9176
PL50Z*	PL50H*	PL50G*	Leyland P76	HYL4663, AYD9204
PL52Z, PL54Z*	PL54H*	PL54G*	Volvo 144	—

* These models have a built-in fader control for two speaker operation.

INTEGRATED CIRCUIT

The integrated circuit IC1 is equivalent to a network of transistors, diodes and resistors providing sound amplification and output (see fig. 1). It is a highly reliable unit and should, in the event of a fault developing, be the least suspect component.

Although reliable, the IC can still be damaged very quickly if due precautions and correct servicing techniques are not used. The following should be kept in mind as a guide when handling the receiver during fault finding.

1. The fuse protection for the receiver is a 3 amp fast acting type.
2. Most faults in the IC, such as shorted or open circuit elements, will show up on a d.c. voltage check.
3. Never short any IC terminal to another or to ground or to the positive rail.
4. Never remove any component associated with the IC while the receiver is switched on. Likewise, never switch the receiver on while such components are missing.
5. Only a low-voltage type soldering iron (with a transformer secondary winding fully insulated from the mains) should be used.
6. It is strongly recommended that a tool, such as the Oryx Solder Remover SR3A, be used when removing components, particularly the IC. Such a tool can remove all excess solder with the minimum of heat being applied and less risk of damage to the component.

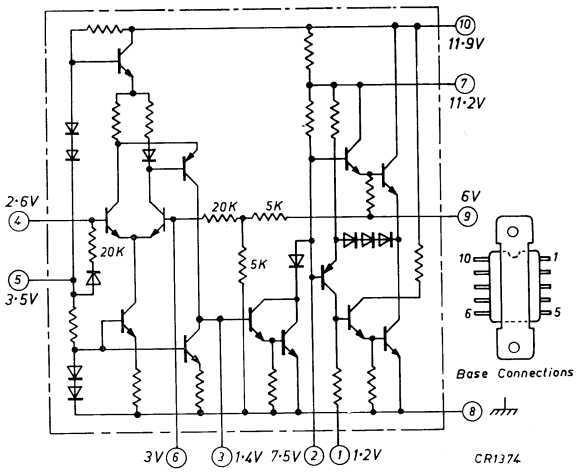

HA 1322 EQUIVALENT CIRCUIT

Fig. 1

ALIGNMENT PROCEDURE

GENERAL

Re-alignment should only be necessary when components in tuned circuits are repaired or replaced.

When adjustments are made use only the correct instruments listed below.

During alignment connect the "low" side of the generator to the receiver chassis and keep the generator output as low as possible to avoid a.g.c. action. Keep the volume and tone controls in their maximum clockwise positions.

When the generator is connected to the aerial socket, use the dummy aerial as shown in fig. 2.

TEST INSTRUMENTS

Signal Generator—modulated 400Hz, or Modulated Oscillator.
Dummy Aerial—see fig. 2.
Output Meter—3 ohms impedance.
I.F. Alignment Tool No. 39462.
Sweep Generator.
Oscilloscope.

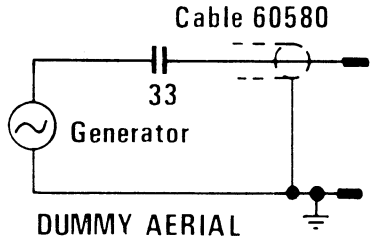

Fig. 2

A. ALIGNMENT PROCEDURE 11 TRANSISTOR MODELS

ALIGN. ORDER	CONNECT GENERATOR TO:	TUNE GENERATOR TO:	TUNE RECEIVER TO:	ADJUST FOR MAX. PEAK OUTPUT
1	R.F.2 Trimmer (C21)*	455 kHz	H.F. Limit	T4 Primary Core (Bottom)
2	R.F.2 Trimmer (C21)*	455 kHz	H.F. Limit	T3 Secondary Core (Top)
3	R.F.2 Trimmer (C21)*	455 kHz	H.F. Limit	T3 Primary Core (Bottom)
4	R.F.2 Trimmer (C21)*	455 kHz	H.F. Limit	T2 Secondary Core (Top)
5	R.F.2 Trimmer (C21)*	455 kHz	H.F. Limit	T2 Primary Core (Bottom)
Repeat the above adjustments until no further improvement is possible.				
6	Aerial Terminal via Dummy Aerial	1,620 kHz (Accurate)	H.F. Limit	Oscillator Trimmer (C9)
7	" "	1,500 kHz	1,500 kHz	R.F.1 Trimmer (C17)
8	" "	1,500 kHz	1,500 kHz	R.F.2 Trimmer (C19 or C21)
9	" "	1,500 kHz	1,500 kHz	Aerial Trimmer (C1)
10	" "	600 kHz	600 kHz	Oscillator Padder (L5)†

* A 0.01μF capacitor should be connected in series with the high side of the test instrument.
† Rock the tuning control back and forth through the signal.

B. IF ALIGNMENT H & G SERIES (Ceramic Filter fitted).

N.B. Ceramic Filters are supplied pre-aligned to 455 kHz ± 3.5 kHz and their adjustment cores **should not be disturbed for any reason.** Hence, when replacing a ceramic filter or doing minor IF adjustments, the following procedure should be used.

1. The tuning of the Ceramic Filter must be assumed to be correct. Set Volume and Tone controls to maximum and tuner to H.F. stop.
2. Detune fully IF transformers T1 and T2.
3. Connect generator to RF2 trimmer C19 via a 0.01μF capacitor.
4. Tune generator to resonant frequency of the filter (peak output on output meter).
5. Leave generator at resonant frequency and adjust IF transformers T1 and T2 for peak output.

If a major re-alignment is necessary then a Sweep Generator and Oscilloscope must be used.

1. Set Volume control to minimum, Tone control to maximum treble, and tuner to H.F. limit.
2. Connect 455 kHz Sweep Generator to R.F. trimmer C19, and Oscilloscope to detector output.
3. Detune fully IF transformers T1 and T2.
4. Align ceramic filter to maximum symmetrical output.
5. Adjust T1 and T2 for maximum symmetrical output.

RF Alignment is then the same as step 6 to 10 in Procedure A above.

CALIBRATION ALIGNMENT

Push Button Tuner

Connect receiver to an aerial.

Check dial scale calibration.

If necessary, adjust position of pointer as shown in fig. 3.

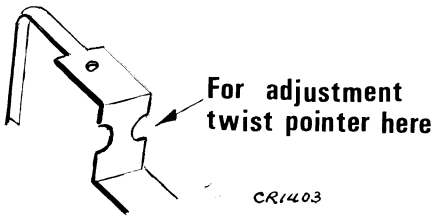

Fig. 3

AWA Manual Tuner

Fig. 4 indicates the route to be followed should the dial cord ever need replacing. A minimum of 350mm of dial cord, code no. 250436, is required for replacement purposes.

Slide pointer either way for adjustment when checking dial scale calibration.

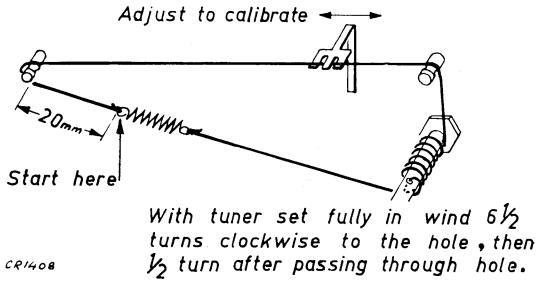

Fig. 4

MODEL	CHASSIS	TUNER		FRONT PLATE	SCALE	NAME BAR		POINTER	ESCUTCHEON		LIGHT FILTER	BACKING PLATE
PL1	—	69833/005	—	73214	74403/001*	73643/006	—	64650/001	73646	314605	73651/001	73652/002
PL1Z	—	69833/014	—	73214	74403/001*	73643/006	—	75923/003	73646	314605	73651/001	73652/002
PL1H	73368/001	76297/004	190687	73214/001	74430/001*	76894/001	578561	76854/001	76892	314509	73651/001	73652/002
PL1G	73313/001	76297/004	190687	73214/001	74430/001*	76894/001	578561	76854/109	76892	314509	73651/001	73652/002
ML4	—	63920/033	—	74510	74404/001	73643/009	—	73658/002	73646	314605	73651/001	73653/002
ML4Z	—	63920/046	—	74510	74404/001	73643/009	—	73658/002	73646	314605	73651/001	73653/002
ML4H	73356/001	77165/004	190710	73214/001	74435/001	76894/008	578568	76854/114	76892	314592	73651/001	76861/002
ML4G	73357/001	77165/004	190710	73214/001	74435/001	76894/008	578568	76854/114	76892	314592	73651/001	76861/002
PL11	—	69833/005	—	73214	74403/001*	74913/001	—	64650/001	73646	314605	73651/001	73652/002
PL11Z	—	69833/005	—	73214	74403/001*	74913/001	—	64650/001	73646	314605	73651/001	73652/002
PL11Y	73362/002	69833/014	—	73214	74403/001*	74913/001	—	75923/003	73646	314605	73651/001	73652/002
PL11H	73368/002	76297/004	190687	73214/001	74440/001	76894/002	578562	76854/109	76892	314509	73651/001	73652/002
PL11G	73313/002	76297/004	190687	73214/001	74440/001	76894/002	578562	76854/109	76892	314509	73651/001	73652/002
PL15	—	69833/012	—	73214	74406	73643/006	—	75923/002	73646	314605	73651/001	73652/002
PL15Z	—	69833/012	—	73214	74406	73643/006	—	75923/002	73646	314605	73651/001	73652/002
PL15H	73368/003	76297/004	190687	73214/001	74431/001	74913/011	—	76854/109	73646	314605	73651/001	73652/002
PL15G	73313/003	76297/004	190687	73214/001	74431/001	74913/011	—	76854/109	73646	314605	73651/001	73652/002
PL21	—	69833/013	—	73214	74403/001*	73643/006	—	75923/003	73646	314605	73651/001	73652/002
PL21H	73369/001	76814/001	190691	73214/001	74436/001*	76894/001	578561	76854/116	76892	314509	73651/001	73652/002
PL21G	73314	76814/001	190691	73214/001	74436/001*	76894/001	578561	76854/116	76892	314509	73651/001	73652/002
PL26	73362/001	69833/014	—	73214	74419	74913/004	—	75923/003	73646	314605	73651/001	73652/002
PL26H	73368/004	76297/004	190687	73214/001	74432/001	74913/016	—	76854/109	73646	314605	73651/001	73652/002
PL26G	73313/004	76297/004	190687	73214/001	74432/001	74913/016	—	76854/109	73646	314605	73651/001	73652/002
PL30	—	69833/013	—	73214	74403/001*	73643/001	—	75923/003	73646	314605	73651/001	73652/002
PL49Z	73362/003	69833/014	—	73214	74419	74913/004	—	75923/003	73646	314605	73651/001	73652/002
PL49H	73368/005	76297/004	190687	73214/001	74432/001	74913/016	—	76854/109	73646	314605	73651/001	73652/002
PL49G	73313/005	76297/004	190687	73214/001	74432/001	74913/016	—	76854/109	73646	314605	73651/001	73652/002
PL50Z	73364/002	69833/013	—	73214	74419	74913/004	—	75923/003	73646	314605	73651/001	73652/002
PL50H	73369/002	76814/001	190691	73214/001	74437/001	74913/016	—	76854/116	73646	314605	73651/001	73652/002
PL50G	73314/002	76814/001	190691	73214/001	74437/001	74913/016	—	76854/116	73646	314605	73651/001	73652/002
PL52Z	73362/004	69833/014	—	73214	74419	74913/007	—	75923/003	73646	314605	73651/001	73652/002
PL54Z	73364/003	69833/013	—	73214	74419	74913/007	—	75923/003	73646	314605	73651/001	73652/002
PL54H	73369/003	76814/001	190691	73214/001	74443/001	76894/004	578564	76854/116	76892	314509	73651/001	73652/002
PL54G	73314/003	76814/001	190691	73214/001	74443/001	76894/004	578564	76854/116	76892	314509	73651/001	73652/002

*Eastern States Scale (N.S.W., Qld. & Vic.), .../002 Southern States Scale (Vic., S.A., W.A. & Tas.) also available

A.W.A. TUNER ASSEMBLIES

PUSH BUTTON TUNER & PLATE ASSEMBLIES:

ITEM	69833/005	69833/012	69833/013	69833/014
Drive Shaft Ass'y	72329/019	72329/025	74561 (116071)*	72329/026
Plate Front Mtg.	73214	73214	73214	73214
Tuner Ass'y	72300/008	72300/013	72300/014	72300/015

* Includes 25 ohm fader control.

Common Items for 72300 Tuner Assemblies:

- Bracket, Support, Drive Shaft 73659
  - in Tuner 72300/014 only 75901
- Core, Tuning, 63939 (4) 251097
- Crank Assembly, Pointer 64644/002
- Knob, Push Button (5) 74957/001
- Panel Assembly, Tuning Coil 54660
  - Including:
  - Coil, Tuning (L3, L4 & L7) 54171
  - Coil, Tuning (T3) 54174
- Pointer, Painted 75923/003
- Shaft Assembly, Clutch 72312/004
- Spring, Tension, Pointer 44171 798141

MANUAL TUNERS: 63920/038; /046

- Clip, Thrust 63926
- Core, Tuning, 63939 (4) 251097
- Grommet, Core Mounting (4) 33913 389261
- Panel Assembly, Coil 55361
  - Including:
  - Coil, Tuning (L3, L4 & L7) 54171
  - Coil, Tuning (T3) 54174
- Spindle, Tuning (63920/039) 74506
- Spindle, Tuning (63920/046) 75932
- Spring, Tension 44179 798149

CIRCUIT: 11 TRANSISTOR CAR RADIO USING PCB 73206

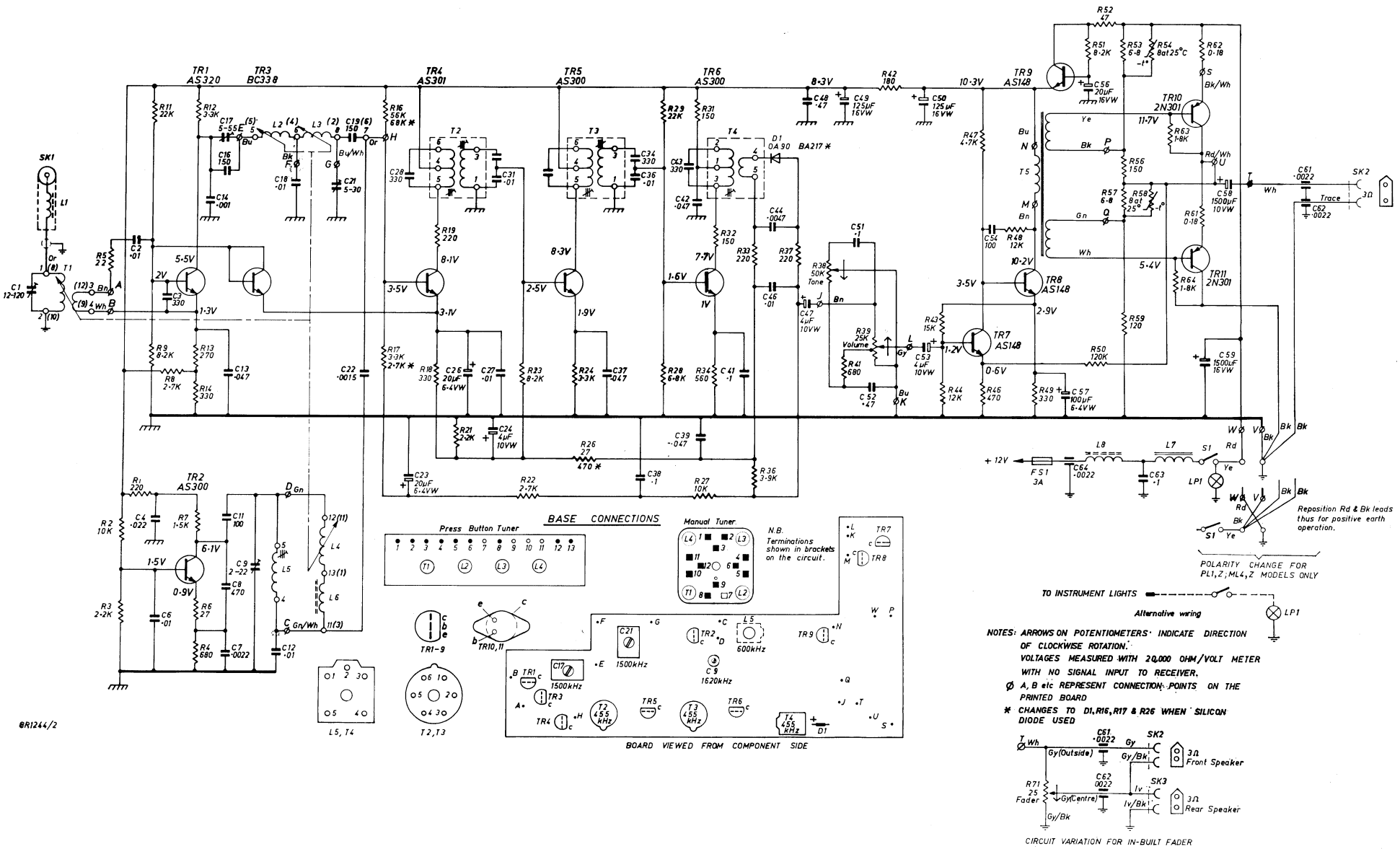

PCB ASSEMBLY 73206

Notes: The board diagram represents the view from the copper track side.

Stipple indicates the copper track.

Black indicates items mounted on component side of the board.

Red indicates components and leads mounted on the copper track side.

Voltages measured under the same conditions that apply on the circuit diagrams.

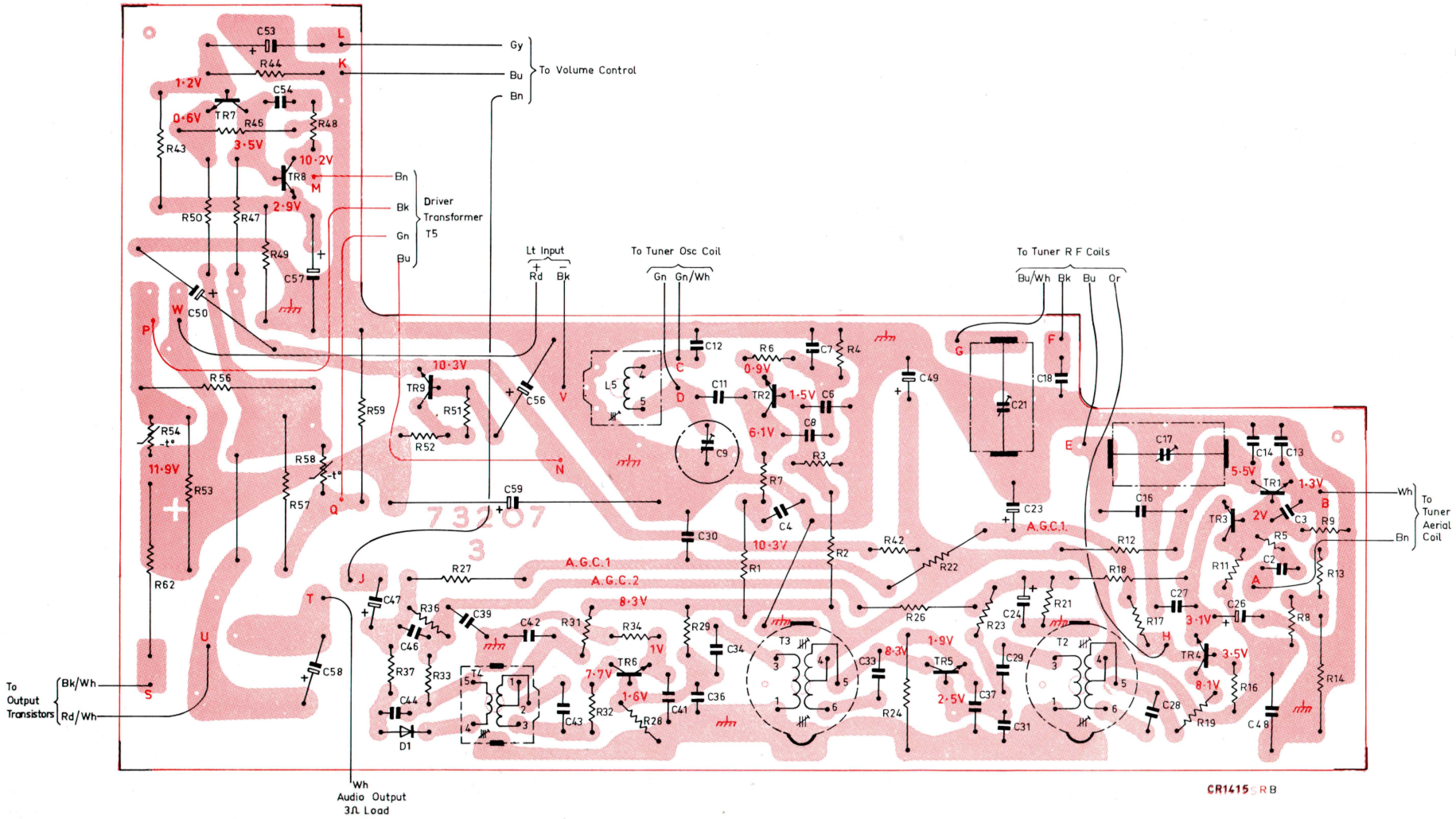

CIRCUT AND BOARD LAYOUT 6 TRANSISTOR 1 IC CAR RADIO (H SERIES MODELS) USING PCB 77155

Notes: The board diagram represents the view from the copper track side.

Stiple indicates the copper track.

Black indicates items mounted on component side of the board.

Red indicates components and leads mounted on the copper track side.

PCB Ass'y 77155/101

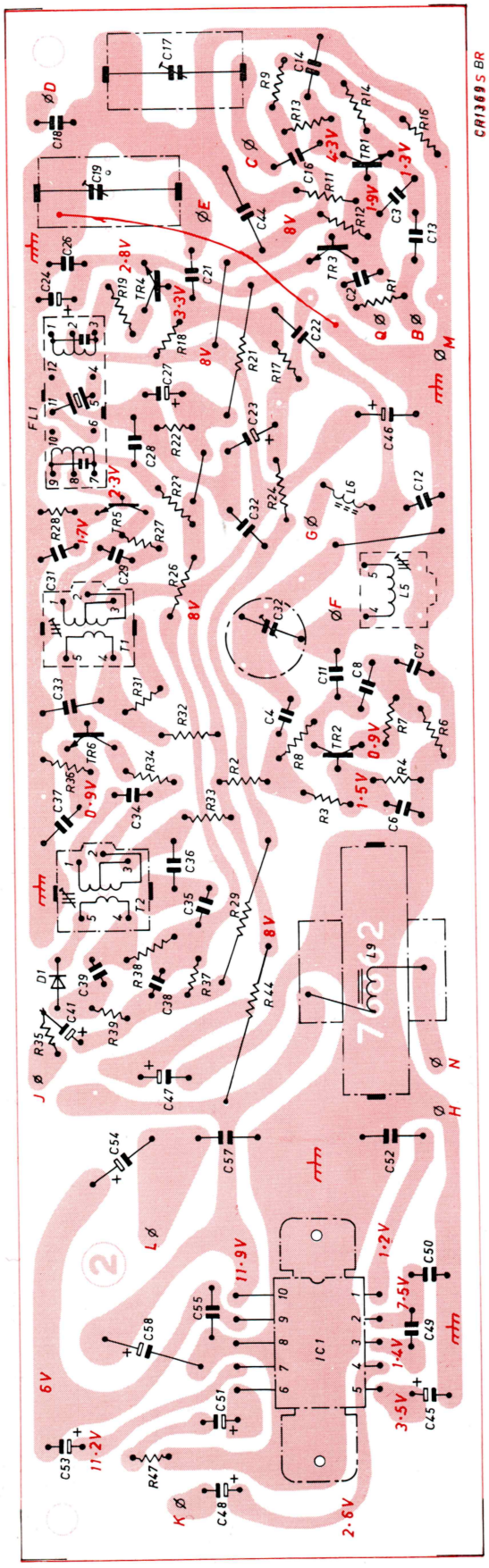

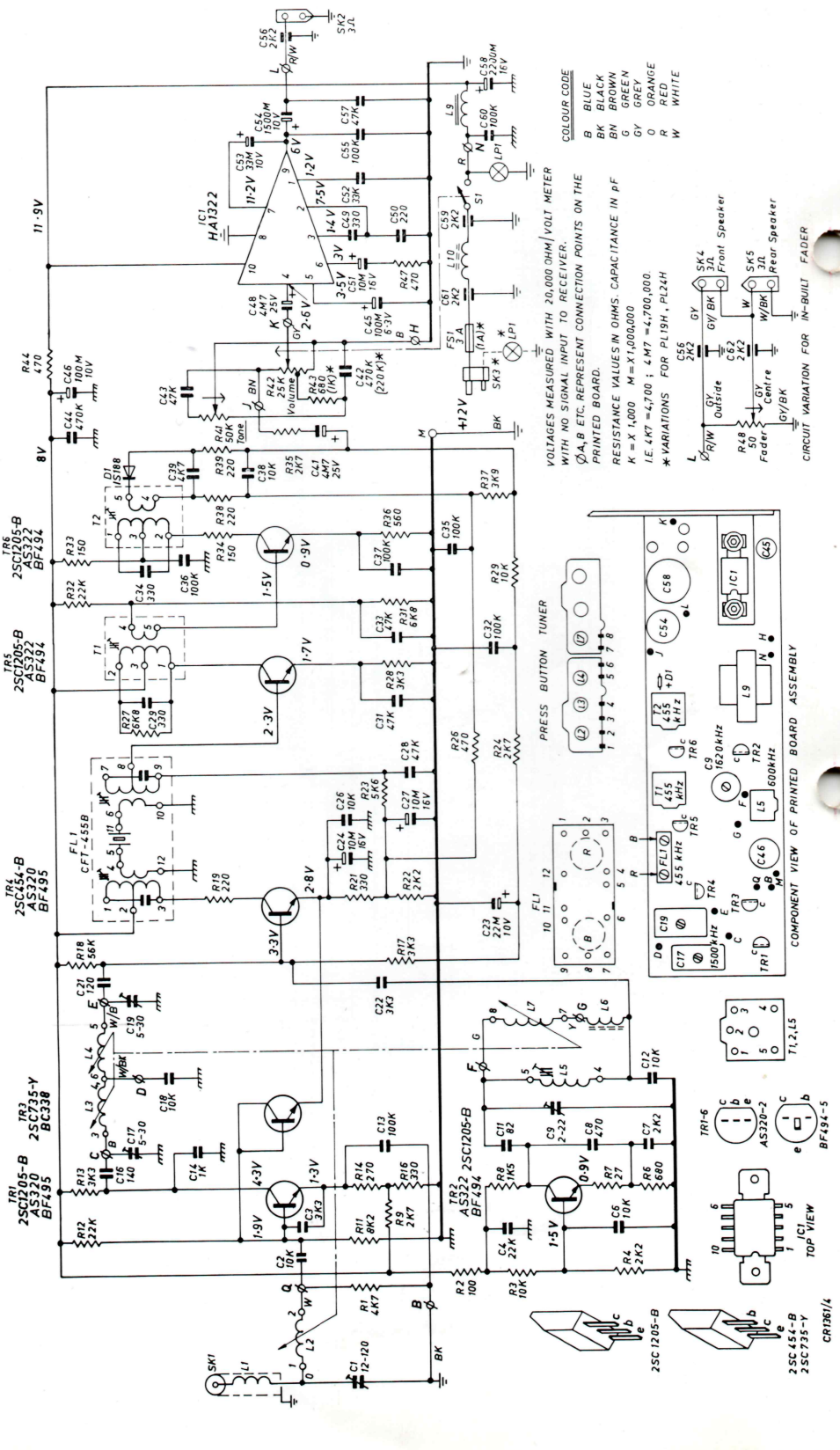

CIRCUT AND BOARD LAYOUT 6 TRANSISTOR 1 IC CAR RADIO (G SERIES MODELS) USING PCB 77445

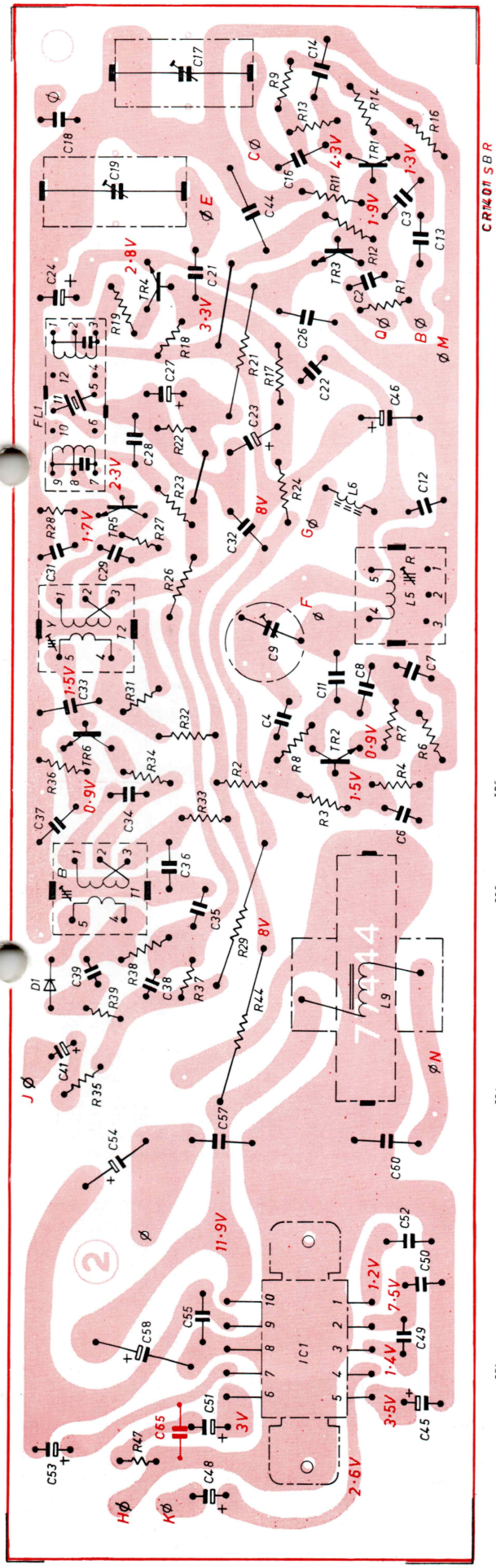

Notes: The board diagram represents the view from the copper track side.

Stipple indicates the copper track.

Black indicates items mounted on component side of the board.

Red indicates components and leads mounted on the copper track side.

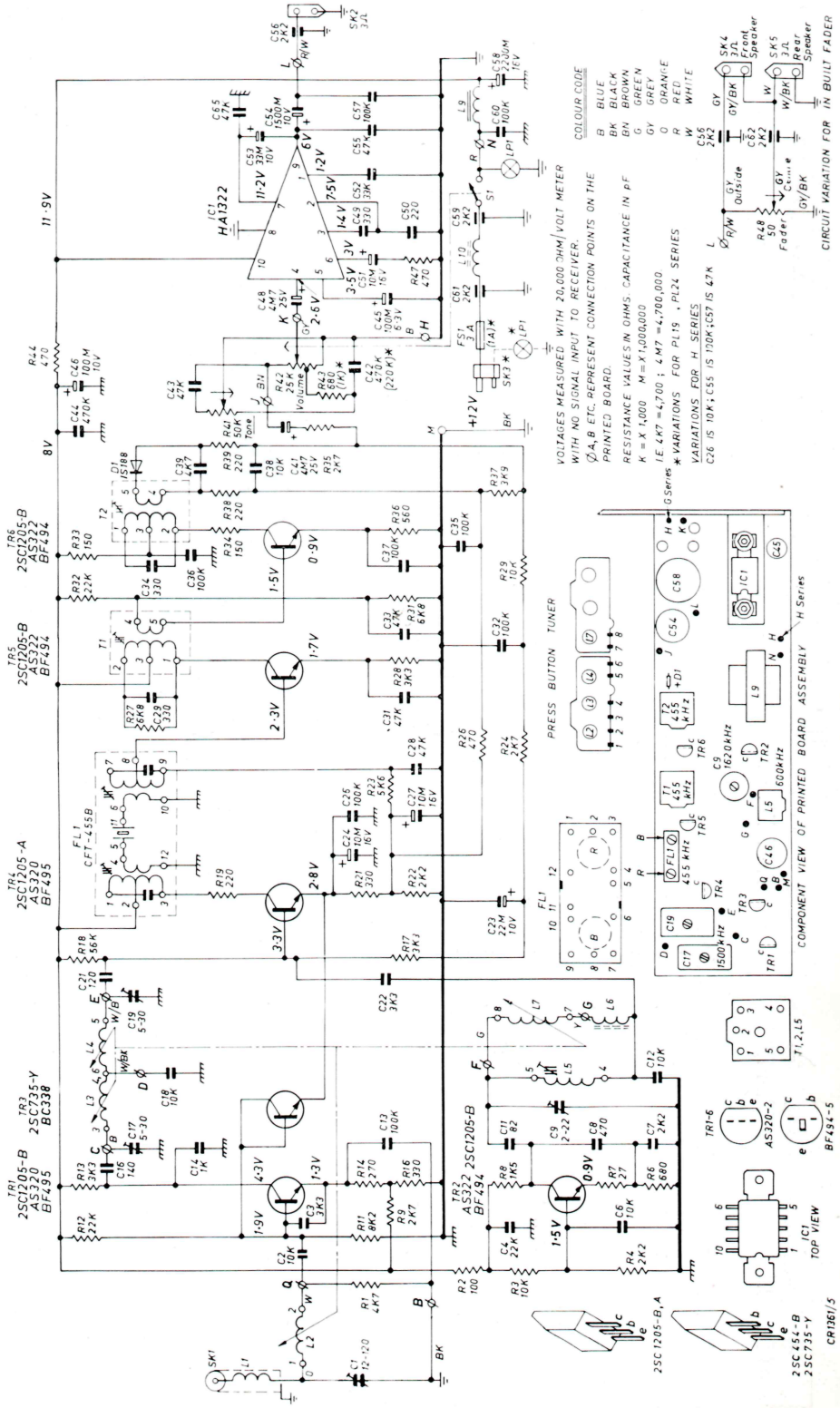

CIRCUIT CODE: 11 TRANSISTOR CAR RADIO USING PCB 73206

CODE NO.	DESCRIPTION			PART NO.
	RESISTORS			
	All resistors composition type unless otherwise stated.			
R1	220Ω	±10%	½ watt	
R2	10KΩ	±10%	½ watt	
R3	2.2KΩ	±10%	½ watt	
R4	680Ω	±10%	½ watt	
R5	22Ω	±5%	½ watt	
R6	27Ω	±10%	½ watt	
R7	1.5KΩ	±10%	½ watt	
R8	2.7KΩ	±5%	½ watt	
R9	8.2KΩ	±5%	½ watt	
R11	22KΩ	±5%	½ watt	
R12	3.3KΩ	±5%	½ watt	
R13	270Ω	±5%	½ watt	
R14	330Ω	±5%	½ watt	
R16	56KΩ	±5%	½ watt*	c.f. D1
	68KΩ	±5%	½ watt†	
R17	3.3KΩ	±10%	½ watt*	c.f. D1
	2.7KΩ	±10%	½ watt†	
R18	330Ω	±10%	½ watt	
R19	220Ω	±10%	½ watt	
R21	2.2KΩ	±10%	½ watt	
R22	2.7KΩ	±10%	½ watt	
R23	8.2KΩ	±10%	½ watt	
R24	3.3KΩ	±10%	½ watt	
R26	27Ω	±10%	½ watt*	c.f. D1
	470Ω	±10%	½ watt†	
R27	10KΩ	±10%	½ watt	
R28	6.8KΩ	±10%	½ watt	
R29	22KΩ	±10%	½ watt	
R31	150Ω	±10%	½ watt	
R32	150Ω	±10%	½ watt	
R33	220Ω	±10%	½ watt	
R34	560Ω	±10%	½ watt	
R36	3.9KΩ	±10%	½ watt	
R37	220Ω	±10%	½ watt	
R38	50KΩ Curve S21 Carbon Tone			74964/003 620884
R39	25KΩ Curve S33 Carbon Vol. W/S			
R41	680Ω	±10%	½ watt (PLI, II only)	
	1.2KΩ	±10%	½ watt	
R42	180Ω	±10%	½ watt	
R43	15KΩ	±10%	½ watt	
R44	12KΩ	±5%	½ watt	
R46	470Ω	±5%	½ watt	
R47	4.7KΩ	±5%	½ watt	
R48	12KΩ	±10%	½ watt	
R49	330KΩ	±10%	½ watt	
R50	120KΩ	±10%	½ watt	
R51	8.2KΩ	±10%	½ watt	
R52	47Ω	±10%	½ watt	
R53	6.8Ω	±5%	½ watt	W.W.
R54	8Ω at 25°C NTC			893708
R56	150Ω	±5%	1 watt	
R57	6.8Ω	±5%	½ watt	W.W.
R58	8Ω at 25°C NTC			893708
R59	120Ω	±5%	1 watt	
R61	0.18Ω	±10%	½ watt	W.W.
R62	0.18Ω	±10%	½ watt	W.W.
R63	1.8KΩ	±10%	½ watt	
R64	1.8KΩ	±10%	½ watt	
	CAPACITORS			
C1	12-120pF trimmer, Aerial			231011
C2	0.01μF ±10% 100VW polyester			
C3	330pF ±2% 63VW N750 disc			
C4	0.022μF ±10% 100VW polyester			
C6	0.01μF ±10% 100VW polyester			
C7	0.0022μF ±10% 100VW polyester			
C8	470pF ±5% 100VW polystyrene			
C9	2-22pF trimmer, Oscillator			231039
C11	100pF ±5% N330 disc			
C12	0.01μF ±10% 100VW polyester			
C13	0.047μF +80%—20% 50VW disc			
C14	0.001μF ±10% 100VW polystyrene			
C16	150pF ±5% 100VW polystyrene			
C17	5-55pF trimmer R.F.1			231218
C18	0.01μF ±10% 100VW polyester			
C19	150pF ±5% 100VW polyester			
C21	5-30pF trimmer R.F.2			231003
C22	0.0015μF ±2½% 50VW polystyrene			
C23	20μF 6.4VW Electro			229254
C24	4μF 10VW Electro			228189
C26	20μF 6.4VW Electro			229254
C27	0.01μF ±10% 100VW polyester			
C28	330pF ±5% 125VW polystyrene			
C29	330pF ±5% 125VW polystyrene			
C31	0.01μF ±10% 100VW polyester			
C33	330pF ±5% 125VW polystyrene			
C34	330pF ±5% 125VW polystyrene			
C36	0.01μF ±10% 100VW polyester			
C37	0.047μF ±10% 100VW polyester			
C38	0.1μF ±10% 100VW polyester			
C39	0.047μF ±10% 100VW polyester			
C41	0.1μF ±10% 100VW polyester			
C42	0.047μF ±10% 100VW polyester			
C43	330pF ±5% N750 disc			
C44	0.0047μF ±10% 100VW polyester			
C46	0.01μF ±10% 100VW polyester			
C47	4μF 10VW Electro			228189
C48	0.47μF ±20% 50VW metallised film			
C49	100μF 10VW Electro			229654
C50	125μF 16VW Electro			229734
C51	0.1μF ±10% 100VW polyester			
C52	0.47μF ±10% 50VW metallised film			
C53	4μF 10VW Electro			228189
C54	100pF ±2% N750 disc			
C56	20μF 16VW Electro			229259
C57	100μF 6.4VW Electro			229694
C58	1500μF 10VW Electro single ended			229931
C59	1500μF 16VW Electro			229932
C61	0.0022μF CAC115 feed thru'			
C62	0.0022μF CAC115 feed thru'			
C63	0.1μF ±10% 100VW polyester			
C64	0.0022μF CAC115 feed thru'			

SEMICONDUCTORS

TR1	AS320	TR8	AS148
TR2	AS300 or AS322	TR9	AS148
TR3	AS313 or BC338	TR10	2N301 or 2N3614
TR4	AS301 or AS320	TR11	2N301 or 2N3614
TR5	AS300 or AS322	D1	OA90*
TR6	AS300 or AS322		BA217†
TR7	AS148		

	TRANSFORMERS	
T1	Tuning Coil, Aerial	54174
T2	1st I.F.	55314
T3	2nd I.F.	55316
T4	3rd I.F.	55322
T5	Driver	55754/001
	INDUCTORS	
L1	Aerial Choke incl. in Aerial Cable Ass'y	190616
L2	Tuning Coil, R.F.1	54171
L3	Tuning Coil, R.F.2	54171
L4	Tuning Coil, Oscillator	54171
L5	Oscillator Padder Coil	54629
L6	Series Padder Coil	53224
L7	LT Choke	51702/005
L8	LT Choke	205970
	MISCELLANEOUS	
FS1	3 Amp. Fuse Cartridge	370011
S1	On-Off Switch coupled to R39	
LP1	Lamp 12V 2.2W	428141
SK1	Socket, Aerial incl. in Aerial Cable Ass'y	190616
SK2	Socket Speaker incl. in Cable Ass'y 55664	**
SK3	Socket Speaker (when Fader Control fitted)	**
SK4	Socket, LT incl. in Cable Ass'y	56631
	Printed Board Ass'y, C/W Components	73206/002
	Printed Board, Bare 73207	142333
**	Comprising Housing Moulded 1545R1	401701
	Receptacle M1189	596502

NOTES: Components mounted on PCB are indicated by indented code numbers: —Components not used:

CIRCUIT CODE: 6 TRANSISTOR 1 IC CAR RADIO WITH PCB 77155 & 77445

CODE NO.	DESCRIPTION	PART NO.
	RESISTORS	
	All resistors composition type unless otherwise stated.	
R1	4.7KΩ ±5% ½ watt	
R2	100Ω ±5% ½ watt	
R3	10KΩ ±5% ½ watt	
R4	2.2KΩ ±5% ½ watt	
R6	680Ω ±5% ½ watt	
R7	27Ω ±5% ½ watt	
R8	1.5KΩ ±5% ½ watt	
R9	2.7KΩ ±5% ½ watt	
R11	8.2KΩ ±5% ½ watt	
R12	22KΩ ±5% ½ watt	
R13	3.3KΩ ±5% ½ watt	
R14	270Ω ±5% ½ watt	
R16	330Ω ±5% ½ watt	
R17	3.3KΩ ±5% ½ watt	
R18	56KΩ ±5% ½ watt	
R19	220Ω ±5% ½ watt	
R21	330Ω ±5% ½ watt	
R22	2.2KΩ ±5% ½ watt	
R23	5.6KΩ ±5% ½ watt	
R24	2.7KΩ ±5% ½ watt	
R26	470Ω ±5% ½ watt	
R27	6.8KΩ ±5% ½ watt	
R28	3.3KΩ ±5% ½ watt	
R29	10KΩ ±5% ½ watt	
R31	6.8KΩ ±5% ½ watt	
R32	22KΩ ±5% ½ watt	
R33	150Ω ±5% ½ watt	
R34	150Ω ±5% ½ watt	
R35	2.7KΩ ±5% ½ watt	
R36	560Ω ±5% ½ watt	
R37	3.9KΩ ±5% ½ watt	
R38	220Ω ±5% ½ watt	
R39	220Ω ±5% ½ watt	
R41	50KΩ Tone } 74964/003	620884
R42	25KΩ Volume W/S }	
R43	680Ω ±5% ½ watt	
R44	470Ω ±5% ½ watt	
R47	470Ω ±5% ½ watt	
	CAPACITORS	
C1	12-120pF Trimmer Aerial	231011
C2	0.01μF ±10% 100VW polyester	
C3	0.0033μF ±10% 100VW polyester	
C4	0.022μF ±10% 100VW polyester	
C6	0.01μF ±10% 100VW polyester	
C7	0.0022μF ±10% 100VW polyester	
C8	470pF ±5% 100VW polystyrene	
C9	2-22pF Trimmer Oscillator	231039
C11	82pF ±5% 630VW polystyrene	
C12	0.01μF ±10% 100VW polyester	
C13	0.1μF+80%—20% 50VW disc MSK	
C14	0.001μF ±5% 200VW polyester	
C16	140pF ±5% 100VW polystyrene	
C17	5-30pF Trimmer R.F.1	231003
C18	0.01μF ±10% 100VW polyester	
C19	5-30pF Trimmer R.F.2	231003
C21	120pF ±5% 100VW polystyrene	
C22	0.0033μF ±10% 100VW polyester	
C23	22μF 16 VW Electro single ended	229283
C24	10μF 16VW Electro single ended	228795
C26	0.01μF ±10% 100VW polyester	*
	0.1μF ±10% 100VW polyester	†
C27	10μF 16VW Electro single ended	228795
C28	0.047μF ±10% 100VW polyester	
C29	330pF ±2% 63VW N750 ceramic	
C31	0.047μF ±10% 100VW polyester	
C32	0.1μF ±10% 100VW polyester	
C33	0.047μF ±10% 100VW polyester	
C34	330pF ±2% 63VW N750 ceramic	
C35	0.1μF +80%—20% 50VW disc MSK	
C36	0.1μF +80%—20% 50VW disc MSK	
C37	0.1μF ±10% 100VW polyester	
C38	0.01μF ±10% 100VW polyester	
C39	0.0047μF ±10% 100VW polyester	
C41	4.7μF 25VW Electro	228189
C42	0.47μF ±20% 50VW metallised film	
C43	0.047μF ±10% 100VW polyester	
C44	0.47μF ±20% 50 VW metallised film	
C45	100μF 6.3VW Electro single ended	229694
C46	100μF 10VW Electro single ended	229654
C48	4.7μF 25VW Electro single ended	228235
C49	330pF ±2% 63VW N750 ceramic	
C50	220pF ±20% Hi-K disc	
C51	10μF 16VW Electro single ended	228795
C52	0.033μF ±10% 100VW polyester	
C53	33μF 10VW Electro single ended	229522
C54	1500μF 10VW Electro single ended	229931
C55	0.1μF ±10% 100VW polyester	*
	0.047μF ±10% 100VW polyester	†
C57	0.047μF ±10% 100VW polyester	*
	0.1μF ±10% 100VW polyester	†
C58	2200μF 16VW Electro	229932
C59	0.0022μF 50VW CAC110 feed thru'	
C60	0.1μF +80%—20% 50VW disc MSK	*
	0.1μF ±10% 100VW polyester	†
C61	0.0022μF 50VW CAC110 feed thru'	
	SEMICONDUCTORS	
TR1	AS320 or BF495 or 2SC1205-B	
TR2	AS322 or BF494 or 2SC1205-B	
TR3	BC338 or 2SC735-Y	
TR4	AS320 or BF495 or 2SC1205-A	
TR5	AS322 or BF494 or 2SC1205-B	
TR6	AS322 or BF494 or 2SC1205-B	
IC1	HA1322	
D1	IS188AM	
	INDUCTORS	
L1	R.F. Choke (incl. in Aerial Cable Ass'y)	190616
L2	Tuning Coil, Aerial }	
L3	Tuning Coil, R.F.1 } in Tuner	refer pages 4 & 5
L4	Tuning Coil, R.F.2 }	
L5	Padder Coil, Parallel	54629
	Padder Coil, Parallel 74463	212840†
L6	Padder Coil, Series	53224
L7	Tuning Coil, Oscillator in Tuner	
L9	LT Filter Choke 74804	206370
L10	LT Choke	205970
FL1	Ceramic Filter CFT 455B	336962
T1	1st I.F Transformer	55382/001
	1st I.F. Transformer 77461	905703†
T2	2nd I.F. Transformer	51691
	2nd I.F. Transformer 77462	905704†
	MISCELLANEOUS	
S1	On-Off switch on R42	
SK1	Socket, Aerial incl. in Cable Ass'y	190616
SK2	Socket, Speaker incl. in Cable Ass'y	55664**
SK4-5	Socket, Speaker (PL21, 50, 54 only)	**
FS1	Fuse, Cartridge 3A	370011
LP1	Dial Lamp 12V 2W	428141
	Printed Board Ass'y, C/W Comp.	77155/102*
	Printed Board, Bare 76862	142382*
	Printed Board Ass'y, C/W Comp.	77455/102†
	Printed Board, Bare 77444	142384†
	**Comprises Housing, Moulded 1545R1	401701
	Receptacle M1189	596502

NOTES: Components mounted on PCB are indicated by indented code numbers: —Components not used: * H Series only. † G Series only.